Parts List				
ITEM	QTY	PART No.	DESCRIPTION	MATERIAL
1	1	VIS1027	Acera Timm Strong Rope Ø6mm	HMPE fibre
2	1	VIS1026	Rubber Hose	Rubber
3	1	BC2612	Ø80 SP Stab Protection Sleeve	PEHD 1000

NOTE: 1
STANDARDS:
API 17H Type 4

NOTE: 2
INTERFACE INFORMATION:

Hydraulic:	N/A
Mechanical:	N/A
Electrical:	N/A
Data Com.:	N/A

NOTE: 4
PROPERTIES:

Material Class:	N/A
Temperature Class:	N/A
Rated Work Press Bar:	Vented
Test Pressure:	N/A
Specification Level:	N/A
Flow Rate:	N/A
Qualification:	N/A
Application:	N/A
Load Rating:	N/A
Torque Rating:	N/A
Design Water Depth:	N/A
Weight in Air:	0,7 kg
Volume:	0,69 dm^3
Submerged Weight:	-0,04 kg

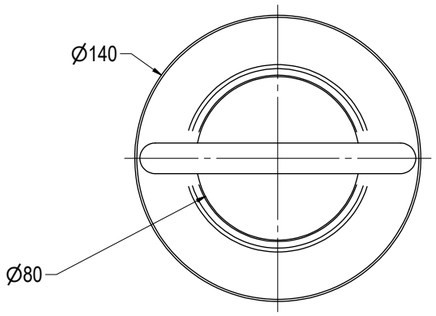

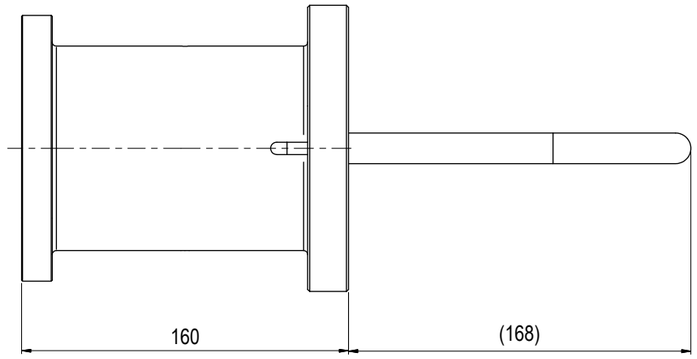

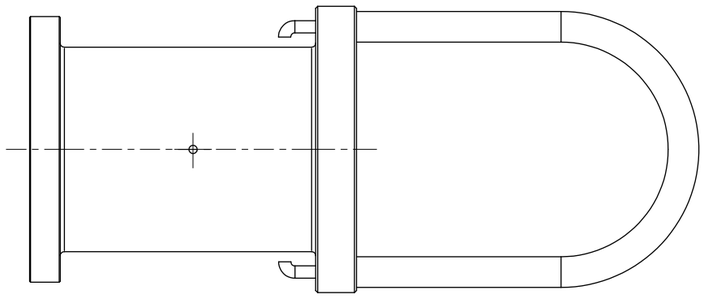

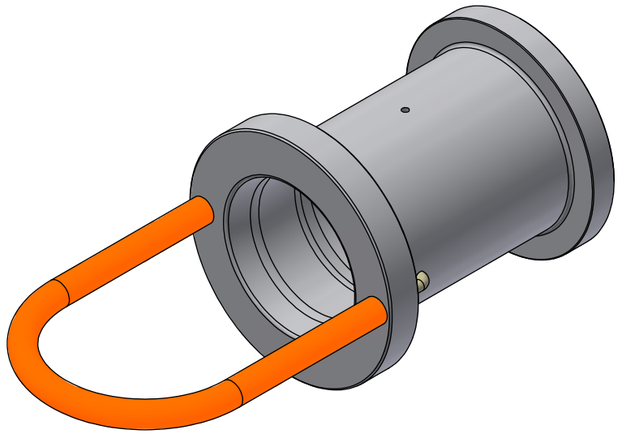

Rev.	Date	Reason for issue	Revision change	Made	Chk'd	Appr.
01	28.3.2025	9-IFU (Issued for Use)		HNJ	TAN	HNJ

BLUE LOGIC

This Drawing is the Property of Blue Logic AS © and must Not be Loaned, Reproduced or Transferred to others without written Permission

Dwg Scale: NTS
Dwg Proj:
Dwg Format: A3

Drawing title: Ø80 SP Stab Protection Sleeve Assy

Drawing number: BC2613

Rev. 01